Universidade do Porto
FEUP Faculdade de Engenharia

# *Manufacturing Process – Lathing*

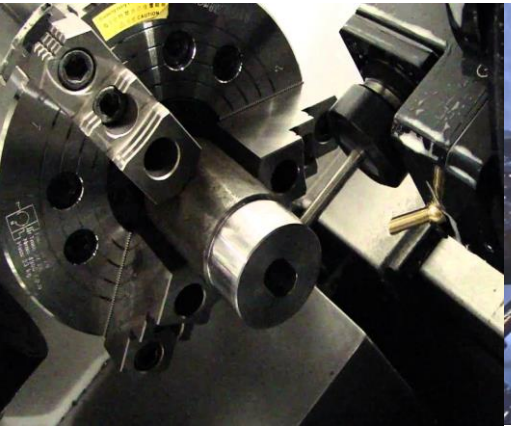
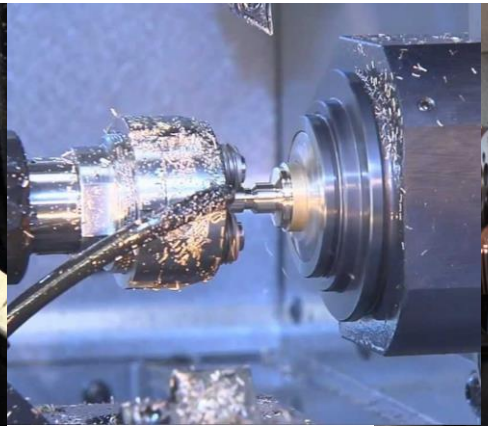
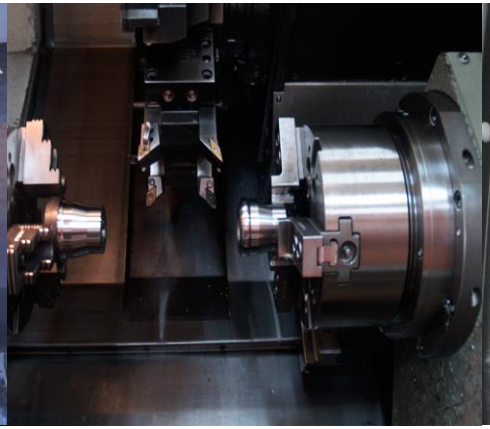



**Team:**

André Duarte Barros Lopes Ferreira



João Pedro dos Passos Ferreira



Tiago Norberto Ferreira Gonçalves



Vasco Daniel Quelhas de Sousa Marques Branco



**Supervisor:**

Prof. António Paulo Batista

FEUP

## *We will show*

- *Definition and fabrication drawings*
- *Stages of the turning process*
- *Some CNC program of the piece*
- *Final look of the piece*
- *Conclusion*

**Introduction**
Piece
Execution
CNC Program
Final Aspect
Conclusion

FEUP

Introduction
Piece
Execution
CNC Program
Final Aspect
Conclusion

# *Definition drawing*

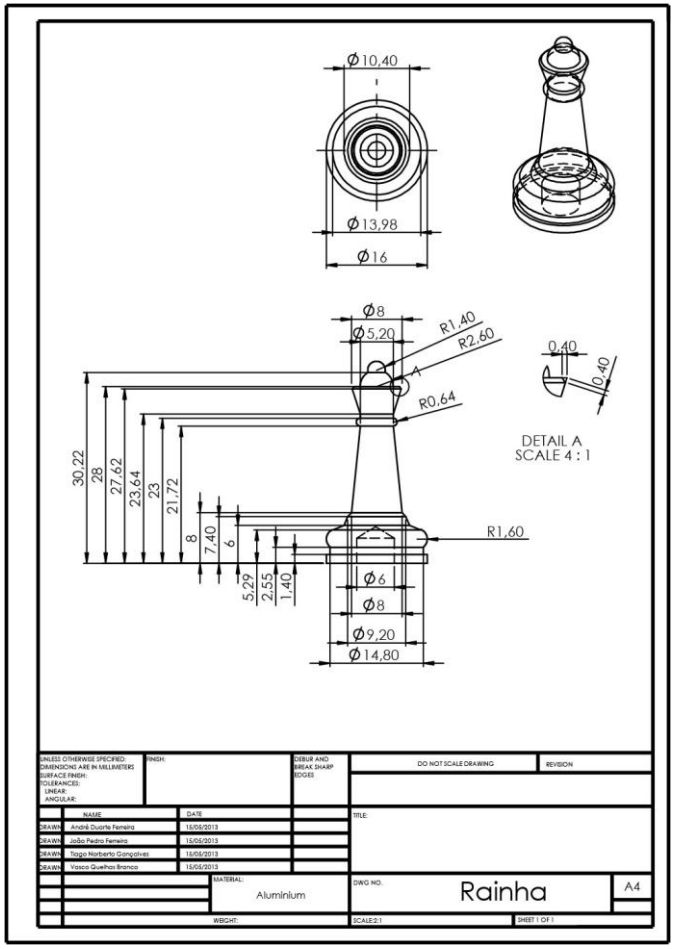

FEUP

# *Manufacturing drawing*

Introduction
Piece
Execution
CNC Program
Final Aspect
Conclusion

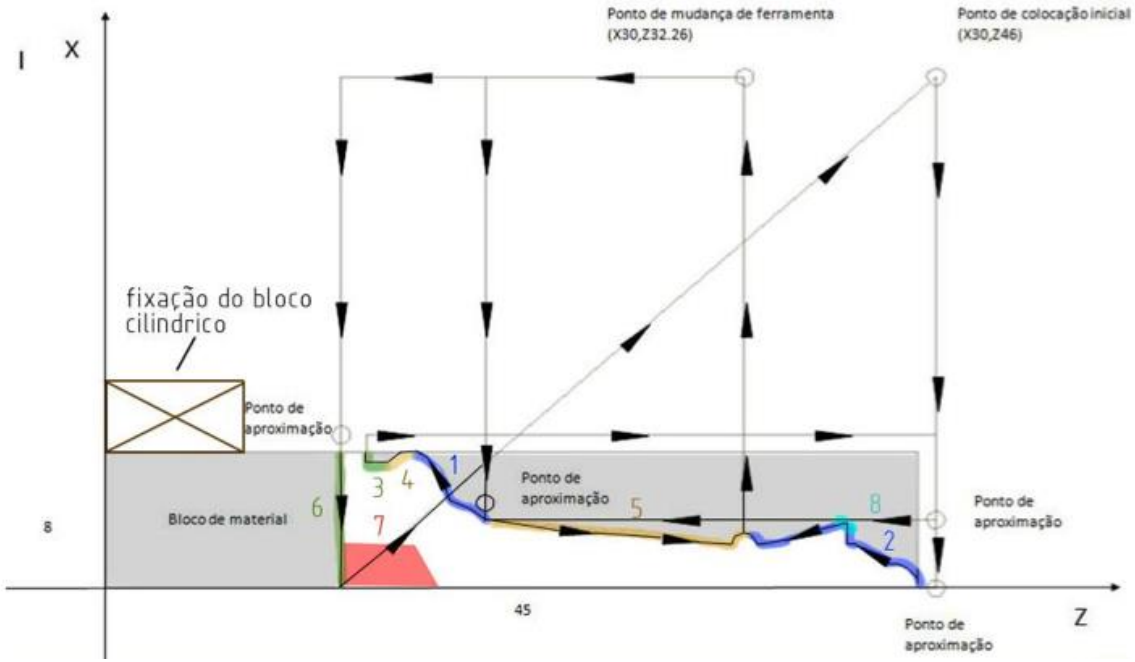

FEUP

# *Example*

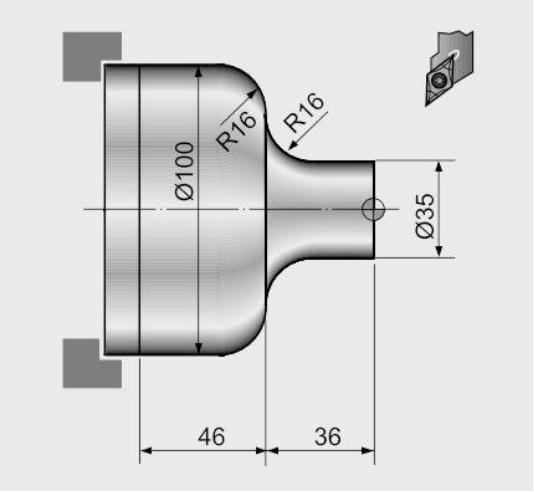




**G02**
**Clockwise Arcs**



**G03**
**Counter-Clockwise Arcs**

*G90 G01 X16 W20*
*G02 X34 W36 R16*
*G03 X50 W52 R16*
*G01 X50 W82*

*oversimplified*

Introduction
Piece
Execution
CNC Program
Final Aspect
Conclusion

FEUP

# *CNC*

Introduction
Piece
Execution
CNC Program
Final Aspect
Conclusion

```
%:
11
N10 G90 G00
N15 M06 T0101
N20 M03 S1000
N25 G50 X30 Z46
N30 X9
N31 G71 U1 R1
N32 G71 P35 Q60 U2 W1 F0.4 S1000
T0101
N35 G91 G01 G42 F0.1 S1000
N40 Z-25
N45 X0.6 W-0.6
N50 X0.6 W-1.4
N55 X1.791 W-0.711
N60 G90 G03 X6.4 W16.8 R1.6
N61 G70 P35 Q60
N70 G00 X9
N75 Z46
N25 G50 X9 Z46
N80 X5
N81 G71 U1 R1
N82 G71 P85 Q105 U2 W1 F0.4 S1000 T0101
N85 G91 G01 F0.1 S1000
N90 W-1
N95 G03 X1.348 W-1.777 R1.4
N100 G90 G03 X2.6 W41 R2.6
N105 G91 G01 X1.4
N106 G70 P85 Q105
N107 G90 G00 X5 Z42
N108 G01 X4 Z41 F0.1 S1000
N110 G91 X-1.4 Z-4.36
N115 Z-0.64
N120 G03 X0.64 Z-0.64 R0.64
N125 G90 G00 X30 Z35.36
N130 M06 T0505
N135 G42 Z14.4
N140 X9
N145 G01 X7.4 F0.1
N150 G00 X30
N155 M06 T0102
N160 G41 X9
N165 G01 X7.4 F0.1
N170 G90 G02 X8 Z16.8 R1.6
N175 G00 X9 Z21
N180 X5
N185 G01 X4 F0.1
N190 X2.6 Z34.72
N160 G91 G02 X0.64 Z0.64 R0.64
N165 G90 G00 X30
N170 M06 T0505
N175 G42 Z13
N180 X9
N185 G01 X-1 F0.2
N190 M30
```

FEUP

## *Photoview 360 Solidworks®*

Introduction
Piece
Execution
CNC Program
**Final Aspect**
Conclusion





FEUP

Introduction
Piece
Execution
CNC Program
Final Aspect
Conclusion

## *Conclusion*

*It has been proposed manufacturing a queen chess to be obtained from a aluminum cylindrical block*

*We attempted to perform a number of different operations with different tools and change of position of the workpiece*

*It was finally programmed a set of commands CNC*

***Thank you very much for your attention !***

*The group*

*André Ferreira, João Ferreira, Tiago Norberto and  Vasco Branco.*